TekSpan® Pipe Flange Bracket Pedestal

Product Code: 60355 / 60350

Description

Allows for direct connection to PN16 pipe flanges.
For supporting pipes from DN80 to DN300.

Technical Details
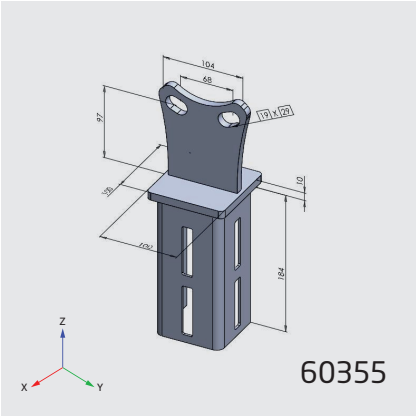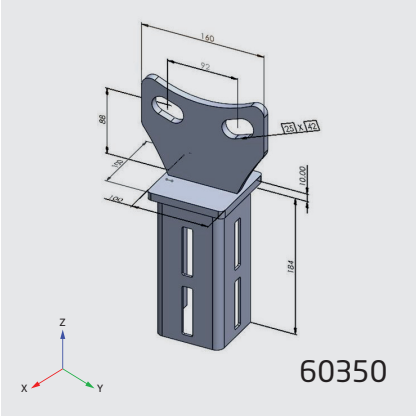
Product Code	60355	60350
Pack Qty	1	1
Weight	2.32kg/pc	2.68kg/pc
Material	S275 Steel	S275 Steel
Finish	HDG	HDG
Profile type	80mm	80mm
Height	305mm	295mm
Width	104mm	160mm
Depth	100mm	100mm
Material thickness	10mm	10mm
Load Fz	12.00 kN	13.30 kN
Load Fz Hanging	5.00 kN	6.60 kN
Load Fy	2.60 kN	3.00 kN
Load Fx	2.90 kN	2.30 kN
Pipe Sizes	DN80 - DN100	DN150 - DN300